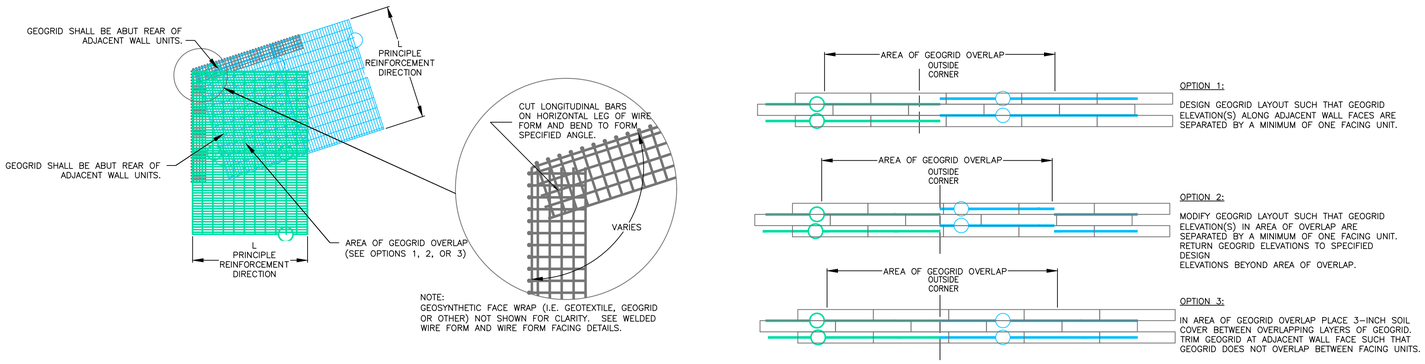

1 / 8H REINFORCED SOIL SLOPE WELDED-WIRE FORM – OUTSIDE CORNER DETAILS
NOT TO SCALE

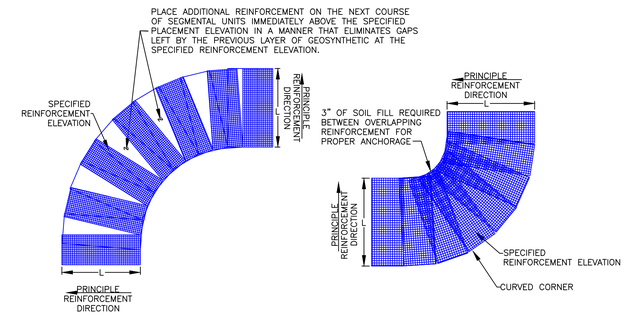

2 / 8H REINFORCED SOIL SLOPE GEOGRID ON CURVE DETAILS
NOT TO SCALE

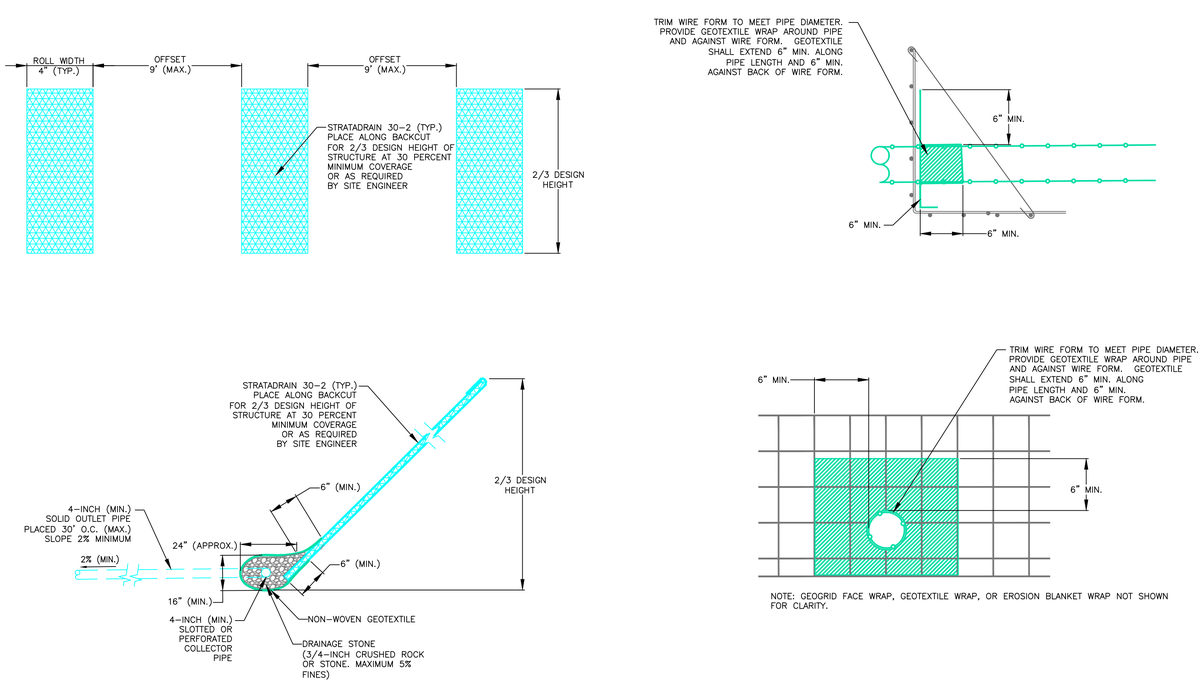

3 / 8H REINFORCED SOIL SLOPE DRAINAGE FEATURE DETAILS
NOT TO SCALE

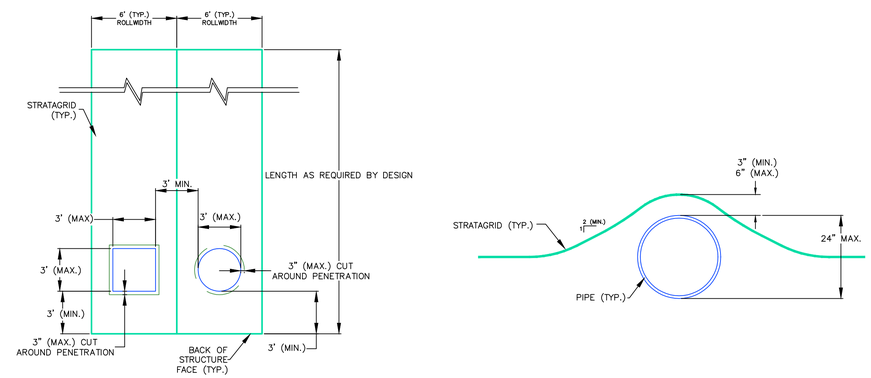

4 / 8H REINFORCED SOIL SLOPE GEOGRID INTERFERENCE DETAILS
NOT TO SCALE

GENERAL NOTES:

1. THE INFORMATION PRESENTED ON THIS SHEET IS FOR INFORMATIONAL AND PERMITTING PURPOSES ONLY. IT IS INTENDED TO PRESENT INFORMATION RELATED TO VARIOUS ELEMENTS OF THE PROPOSED LANDFILL EXPANSION INCLUDING LINER SYSTEM, STORMWATER CONTROLS, AND ACCESS ROAD. CONSTRUCTION DETAILS RELATED TO THE MSE WALLS WILL BE PREPARED AT A LATER DATE.
2. THE DESIGN OF THE MSE WALLS IS THE RESPONSIBILITY OF EARTH ENGINEERING, INC. PLEASE REFER TO FORM 24, ATTACHMENT 24-10 FOR ADDITIONAL INFORMATION RELATED TO THE MSE WALL DESIGN.

BA GROUP INC.
Environmental Consultants

REVISIONS

DELAWARE COUNTY SOLID WASTE AUTHORITY
ROLLING HILLS LANDFILL
SOUTHERN AREA LANDFILL EXPANSION
EARL TOWNSHIP BERKS COUNTY PENNSYLVANIA

LANDFILL MSE WALL DETAILS
SHEET 8

DATE: 09/25/17
DRAWN BY: SWH
CHECKED: KCC
BAI DRAWING NO: DCSWA-107D017H
SHEET NO. 8H OF 11

State College Office (814) 238-2060 • Delaware Valley Office (610) 495-5585